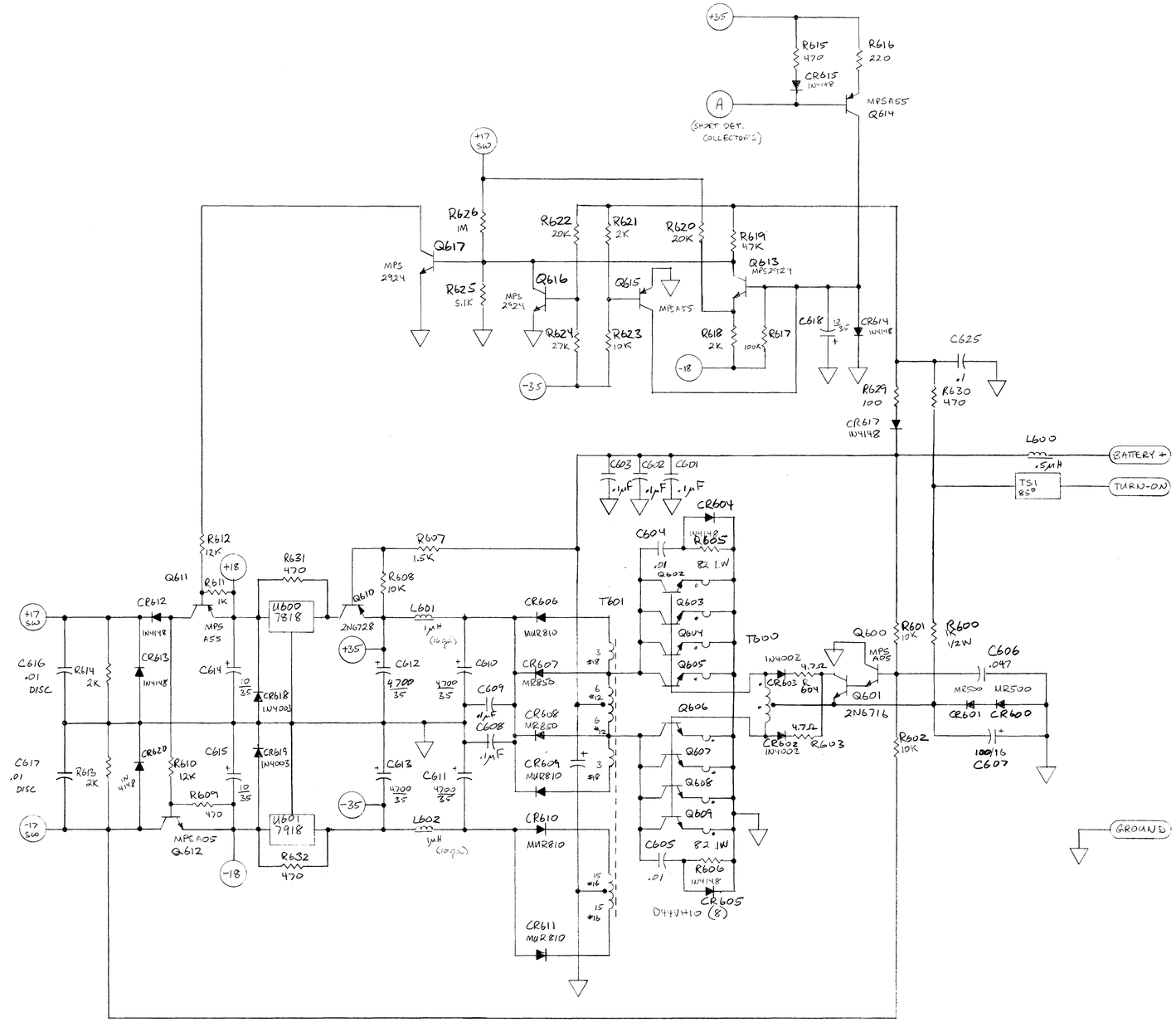

ROCKFORD CORP. TEMPE, ARIZONA		
SCALE:	APPROVED BY:	DRAWN BY JRF
DATE: 11/15/82		REVISED
POWER 6 SCHEMATIC - POWER SUPPLY		
SHEET 1 OF 2		DRAWING NUMBER P6PS0001A

22 X 34 PRINTED ON NO. 1000H - 10 CLEARPRINT FADE-OUT